AXIX™ Specification Sheet: 450U 20mm

[Revised March 2020]

Top View

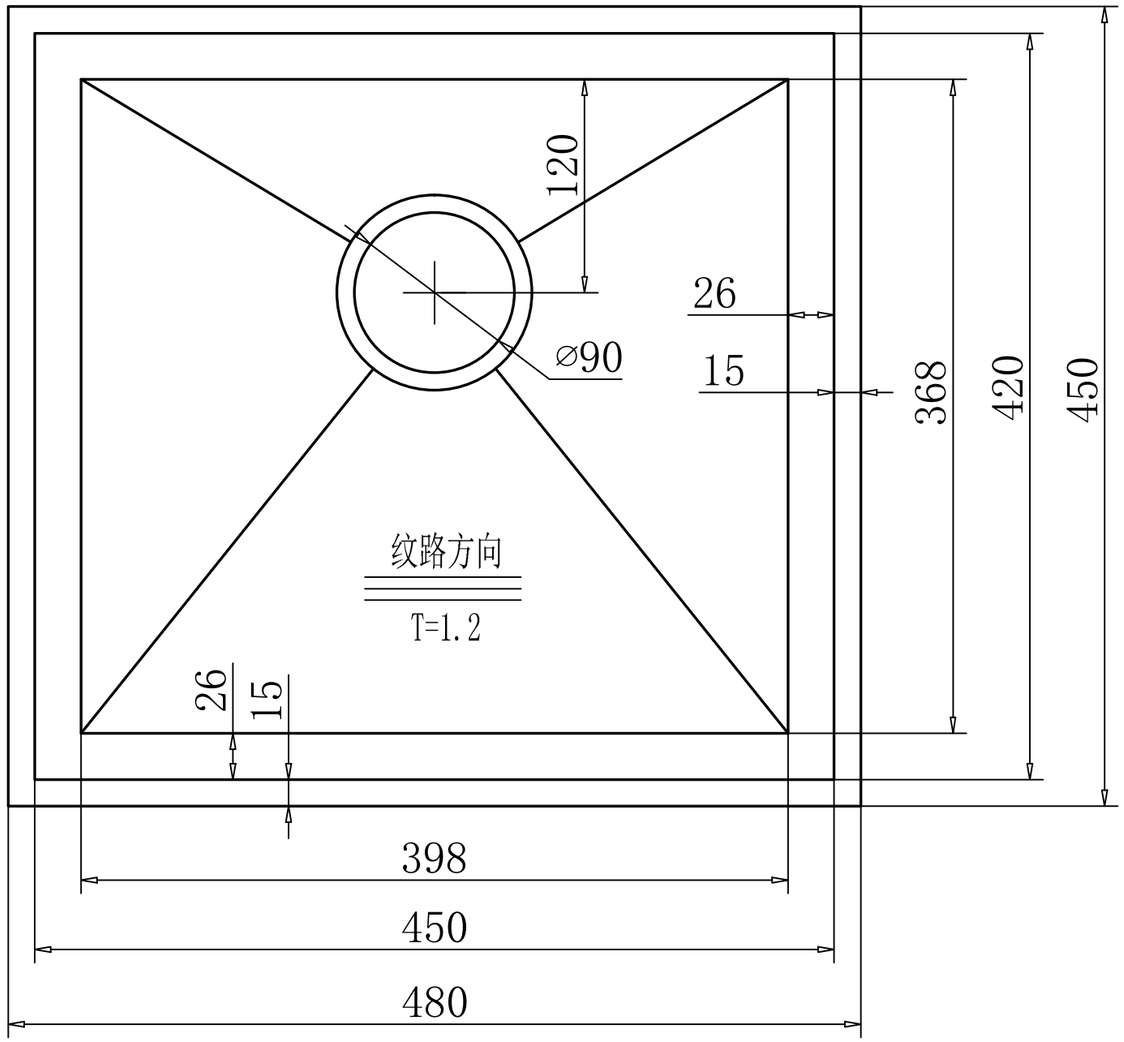

Front View

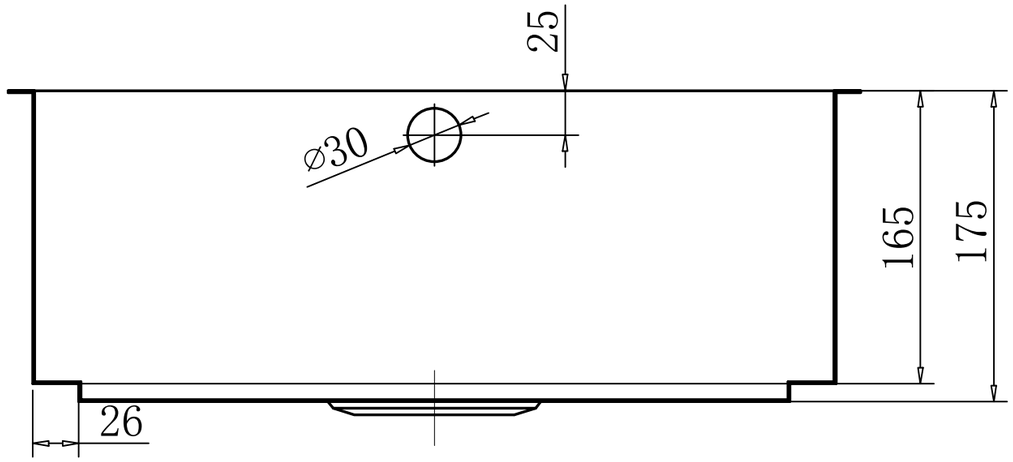

CASF Australia
Unit 3, 208 Walters Road, Arndell Park NSW 2148
Tel: 1300 795 044
Email: projects@casf.com.au

casf your space your way

AXIX™